SMART
IoT CLOUD SOLUTIONS

ÜÇGE | blu.xone Smart Solutions

smart solutions

ÜÇGE's new brand **blu.xone**; combines enterprise values and the technological approach systematically within the next-gen solutions under IoT cloud infrastructure.

We are cultivating our vision for the future in order to lead and provide high-technology solutions to the industries we are involved in. With its visionary approach and as innovation has always been a driving value for ÜÇGE, this value is embraced with the synergy of all team members, from the upper management to all levels.

The blu.xone IoT platform consists of groundbreaking technologies such as edge computing, visual recognition, shelf labelling, order picking and image processing at the cloud infrastructure while integrating the technology with the solutions by providing API dashboards and customized web services that are in flexible integration with the currently owned systems.

blu.xone

Smart Solutions

electronic shelf label system

ÜÇGE's ESL system provide the opportunity for your store to share the most up-to-date and detailed information by price tags, minimizing the labor and informing your customers with the correct details.

In addition, the system aims to ensure operational management continuity while transferring the information change process to the digital environment. This way, paper waste is prevented, and many time-consuming problems are eliminated.

Data Automation
Both manual and automatic data transfer

Authorization Module
User creation and authorization

Advanced Report Formats
Reporting and log archive on a product and label basis

Promotion Planning
Integrated promotional price calendar scoring module

Automatic Backup
Backup · restore from backup disaster recovery solution

Remote Maintenance
Ticket system for service

How it works?

Cloud Configuration

alternative 1

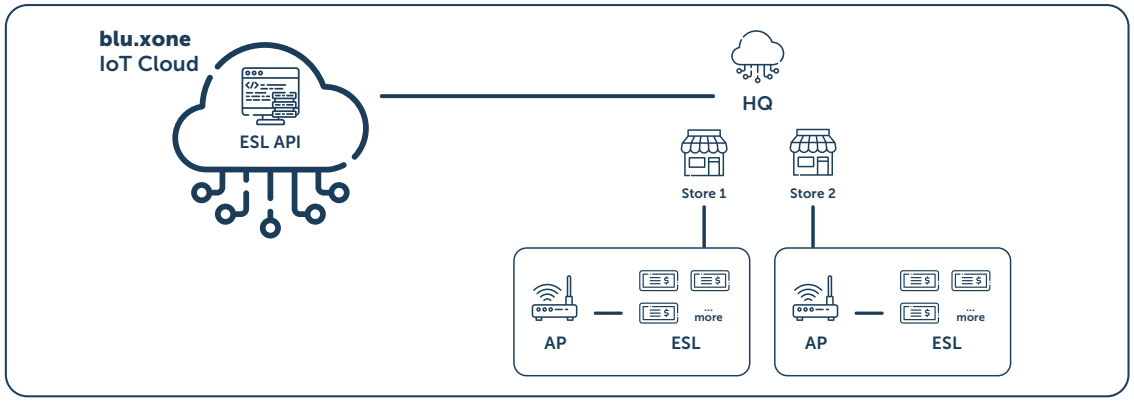

On-Premise Configuration

alternative 2

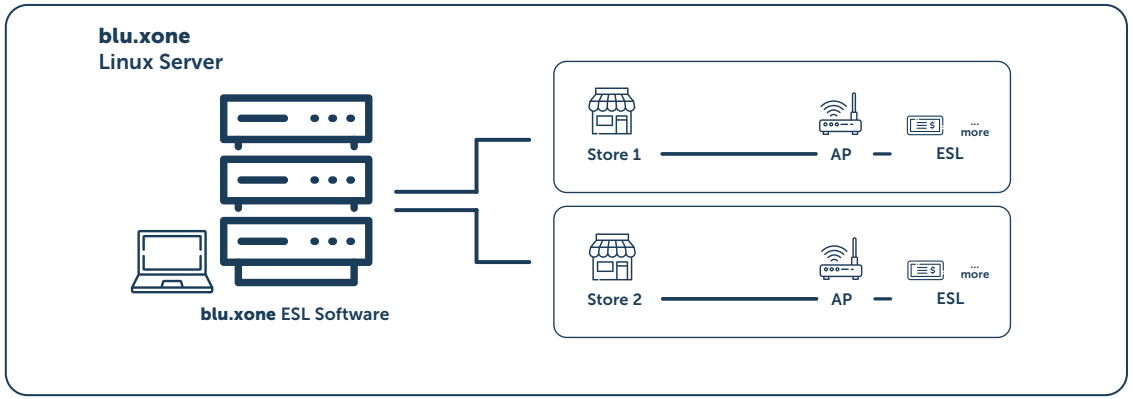

blu.xone
NFC Configuration

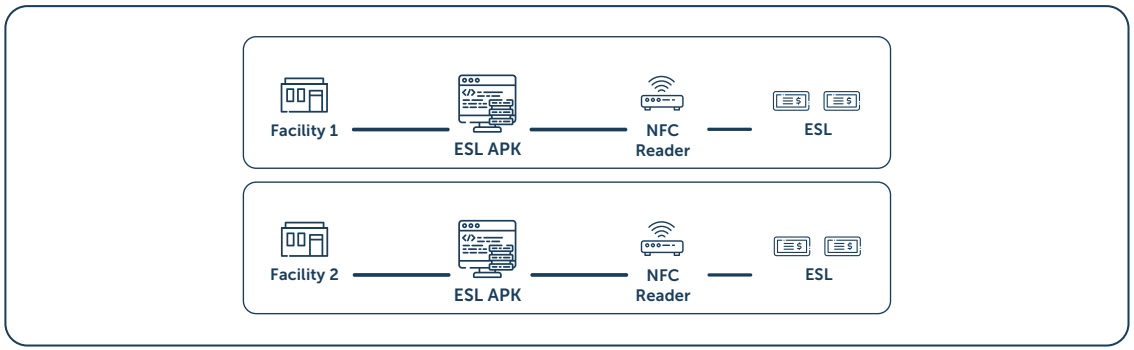

order management wizard

Designed to improve order collection performance, Order Management Wizard retonches the order collection process while seamlessly integrating into the current planogram and layout plans.

Built onto ÜÇGE's ergonomic order-picking trolley, the software significantly reduces labor costs and the margin of error for each e-commerce order. In addition, the software offers flexible integration to the external e-commerce dashboards and internal stock-keeping databases while providing the analytical data for brands to develop the picking & restocking processes.

The picking-aid navigation screen supports the layouts in panoramic 2D or AR based 3D per choice.

AR Navigation

Order Picking Assist

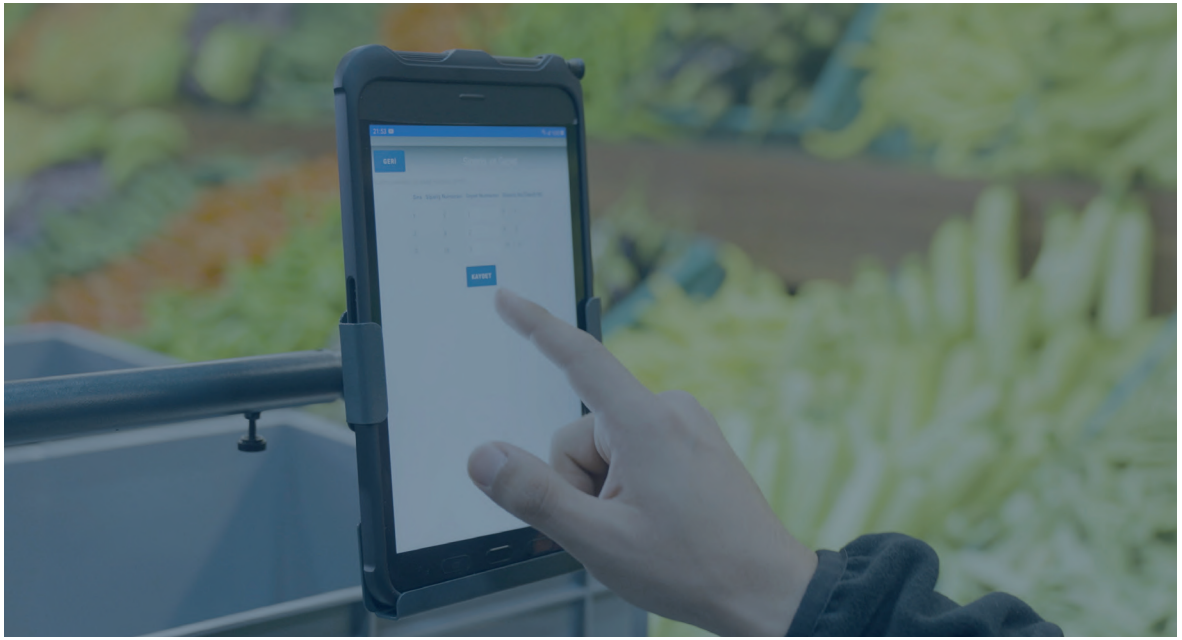
GERİ
KAYDET

GERİ
BARKOD OKUT
YENİLE

ketçap
soslar
V-BLOCK

density map software

Understanding the customer journey in retail has been a great challenge for brands where the interest depends on the customer flow, dwelling times between aisles, and product visibility compared with shopper engagement.

ÜÇGE provides a must-have analytical system for any retail concept that converts the statistical movement data into significant findings to improve merchandising activities and reshape the store layout.

The software is built on image processing technology, computing the data in seconds taken from the visuals by in-store cameras and turning them into the report formats for a crucial understanding of the store layout's heatmap while conforming to the data privacy regulations via specialized human recognition format.

crowd counting software

Check-out counters are the last touch point with the customers in the store. Therefore, providing a seamless checkout process is an excellent brand feature that significantly increases consumer satisfaction.

Taking action via real-time data is indispensable in the retail industry. Considering in-store operations efficient for everybody, blu.xone check-out area crowd-counting software provides real-time counting and image processing in the specialized area.

The smart tracking software informs the store executives of any inconvenience with the queue time. Therefore providing the opportunity to take action within minutes, to solve the stoppages, elevate customer satisfaction and optimize employee work schedules, conforming to the data privacy regulations via specialized human recognition format.

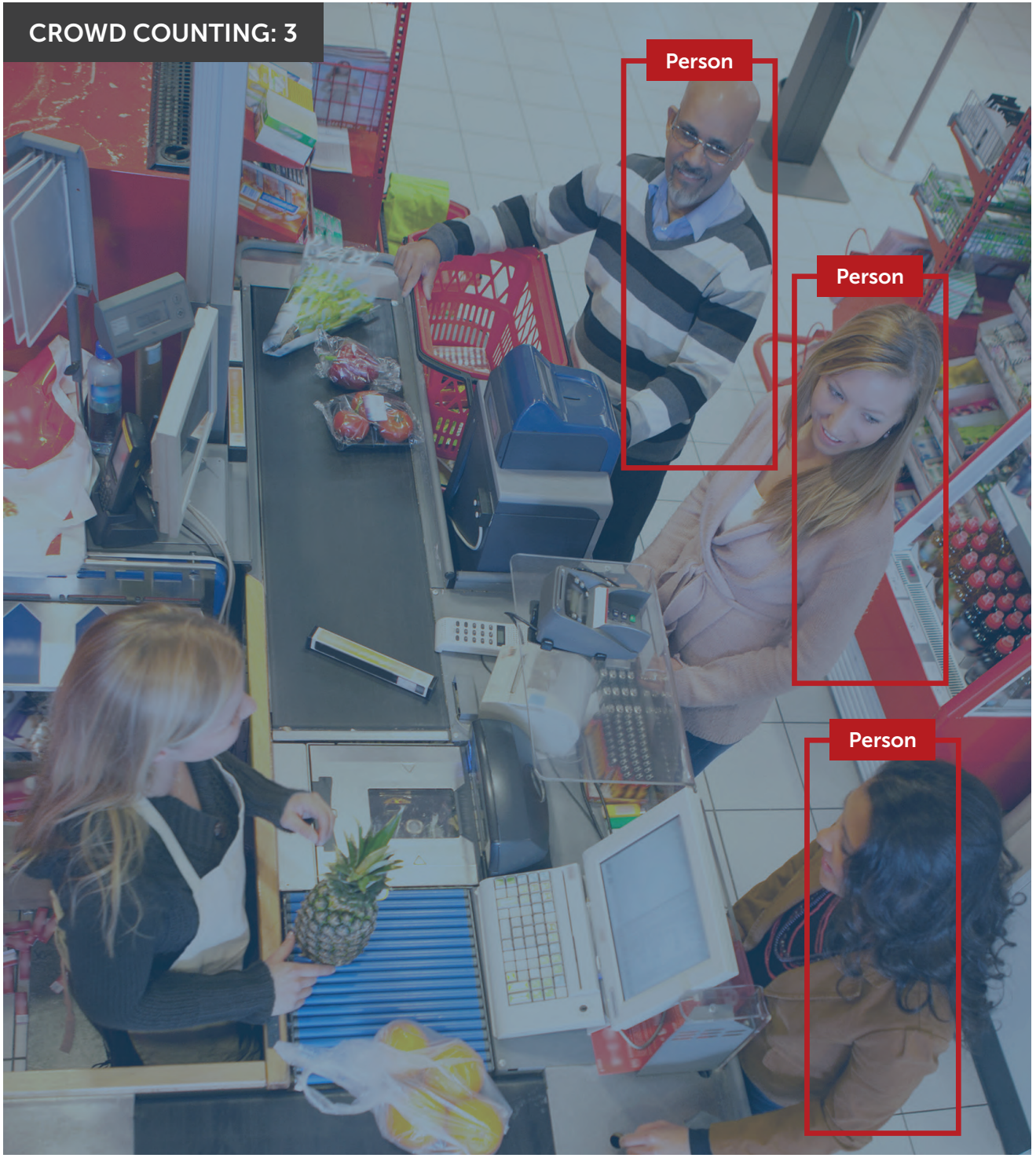
CROWD COUNTING: 3
Person
Person
Person

sensors

Managing the proper preservation of goods without breaking the cold chain, storing them fresh, and offering the merchandise within accurate temperature limits is the traditional expectation from the industry.

The capability of the all-in-one sensors provide additional metrics; air quality, particle amount, humidity, sound level and much more to analyze and optimize.

Dynamic consumer and employee engagements along the store's refrigerated units and the merchandise exposure to different temperatures may lead to unhygienic conditions.

Implemented sensors monitor the temperature data instantly in the cooler units and cold air rooms and feed the blu.xone traceability software dashboard. Therefore, configured with the threshold values - the activated alarm mechanism warns the executives to take action within minutes.

The system not only provides safe merchandise shopping but also helps energy management protocol to stay under control. In contrast, the system prevents losses and decreases the food waste margin caused by unconventional temperature conditions.

family shopping mobile app

The Family Mobile Application app is a shopping experience solution offered to consumers. The app can work integrated with different e-commerce platforms. At the same time, the lists can be shared, and multiple users can access and configure the lists in the application.

As the software was developed in the sense of creating shopping lists should also be entertaining, the solution provides better engagement on product purchases and detailed product orientations.

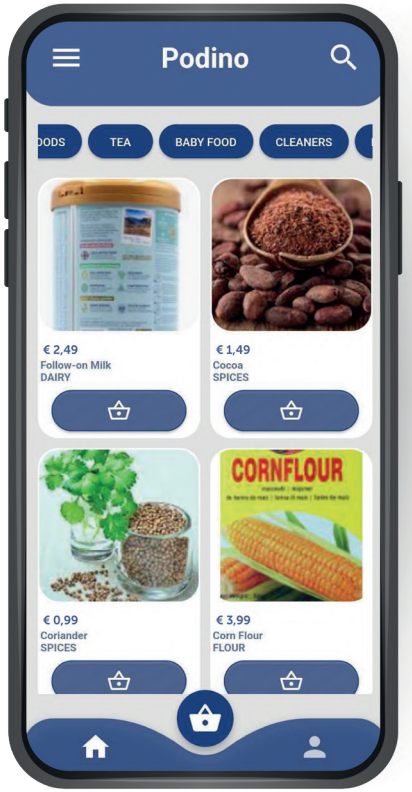

ODIS automated vertical storage system

ÜÇGE combined technology with practical use to provide future-proven innovative solutions for all spaces in any industry. ODIS system offers both conceptual retail industry solutions separately; timeless pick-up of e-commerce orders and an automated dark store concept.

The system is cost-effective and fully automated with the integration of logistics databases of e-commerce platforms.

24/7 Pick-up with ODIS

ODIS was developed to benefit from the unused height spaces, stacking the goods vertically with the aid of the innovative shuttle robot moving in 2-axis, simplifying the automated storage and retrieval system method - commonly used in sophisticated warehouses.

As online grocery shopping and e-commerce industries are gaining a significant volume today, ODIS' built-in trays are stacked into the vertical storage system to provide fresh and safe storage of E-commerce orders. Combining the edge points - the consumer intent to pick up and the logistics operations, the goods can be picked up by the consumer anytime, as the system is designed to function for 7/24.

24/7 Automated Retail Service

ODIS is configured into a dark store mechanism in another conceptual application model. As the merchandising activities and restocking are automatic, the trays of the vertical stacking system function as shelves. The built-in sensors automatically check product availability, and the smart robot operates the restocking.

The system perfectly combines blu.xone technologies to provide seamless and automated error-free next-generation shopping preferences.

Maximize The Storage Space Efficiency

With it's functional design, ODIS provides maximum storage efficiency in minimum space by eliminating the need of horizontal storage space and intralogistics supply problems. The system provides energy, space and time advantages when implemented functionally as a buffer storage.

By minimizing the storage and supply costs, ODIS increases the operational efficiency of businesses with a technological and systematic storage management approach.

ÜÇGE

• *The patent of the products in this catalog and the publication right of the information belong to ÜÇGE.*
It cannot be copied, reproduced or published without permission.

Işıktepe OSB Kahverengi Cad. No:16 16215 Nilüfer, Bursa TÜRKİYE T: +90 224 280 00 00
| ucge.com | bluxone.ucge.com | sales@ucge.com |